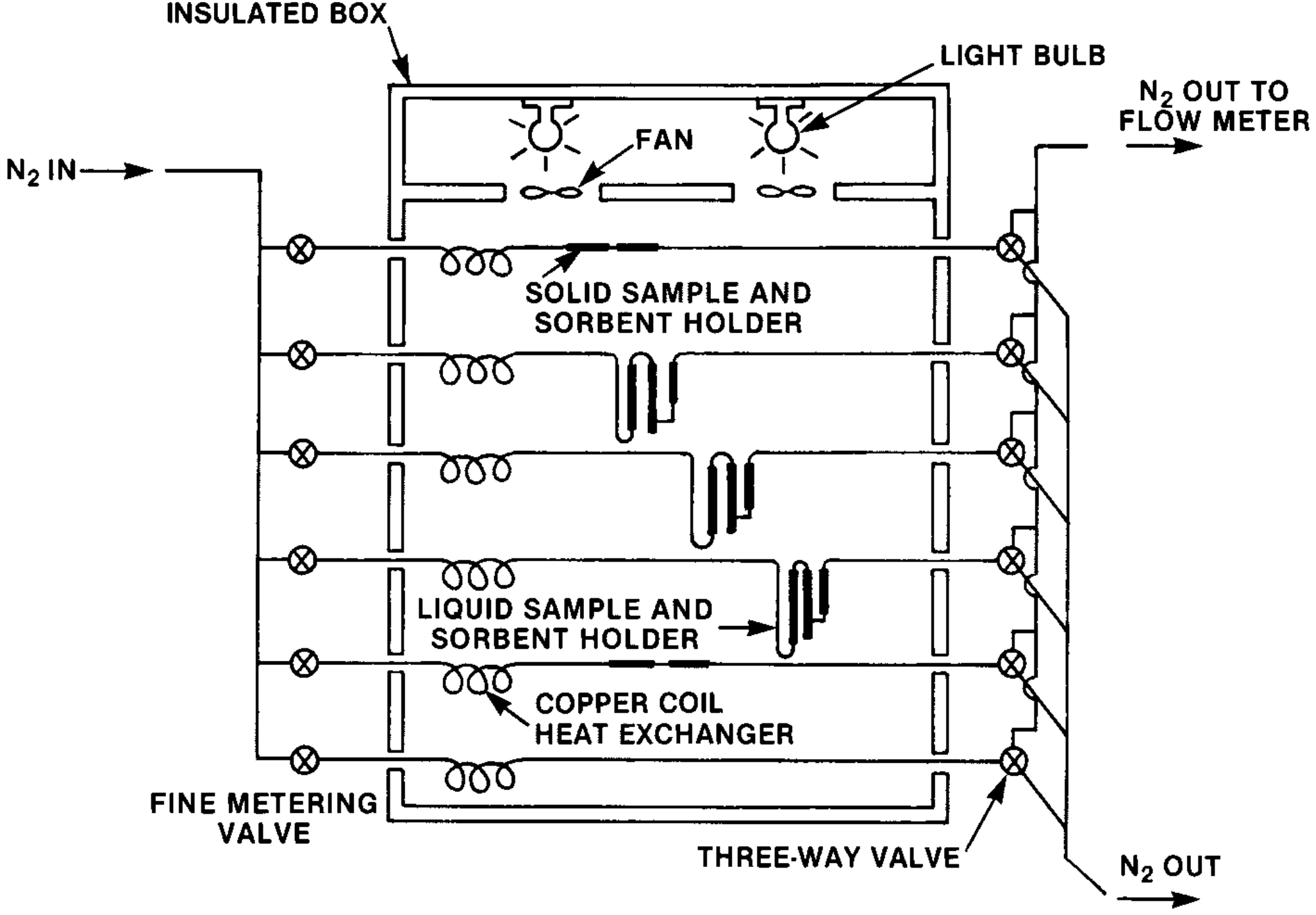
INSULATED BOX
LIGHT BULB
N_2 OUT TO FLOW METER
FAN
N_2 IN
SOLID SAMPLE AND SORBENT HOLDER
LIQUID SAMPLE AND SORBENT HOLDER
COPPER COIL HEAT EXCHANGER
FINE METERING VALVE
THREE-WAY VALVE
N_2 OUT