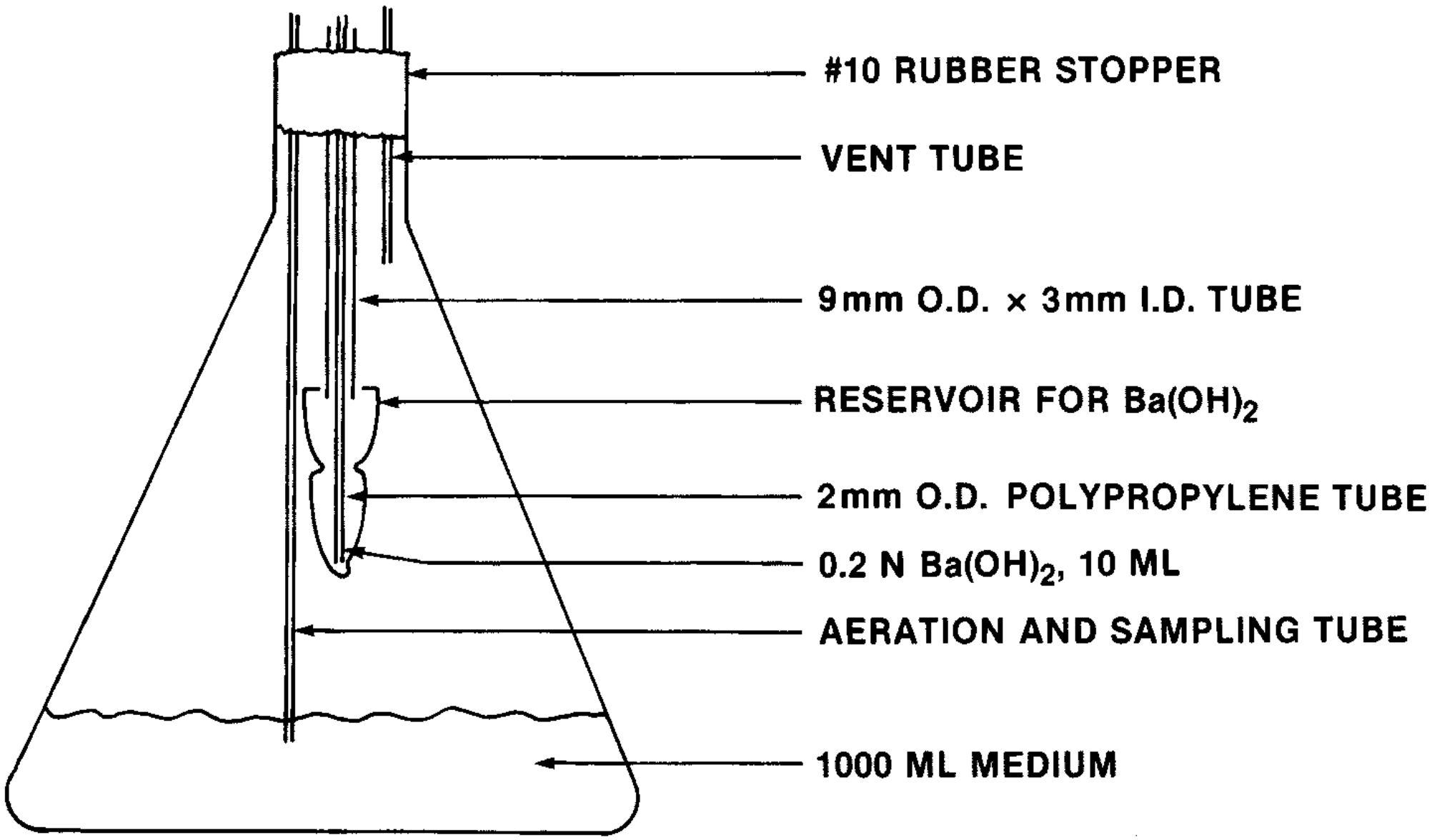
#10 RUBBER STOPPER
VENT TUBE
9mm O.D. × 3mm I.D. TUBE
RESERVOIR FOR $Ba(OH)_2$
2mm O.D. POLYPROPYLENE TUBE
0.2 N $Ba(OH)_2$, 10 ML
AERATION AND SAMPLING TUBE
1000 ML MEDIUM