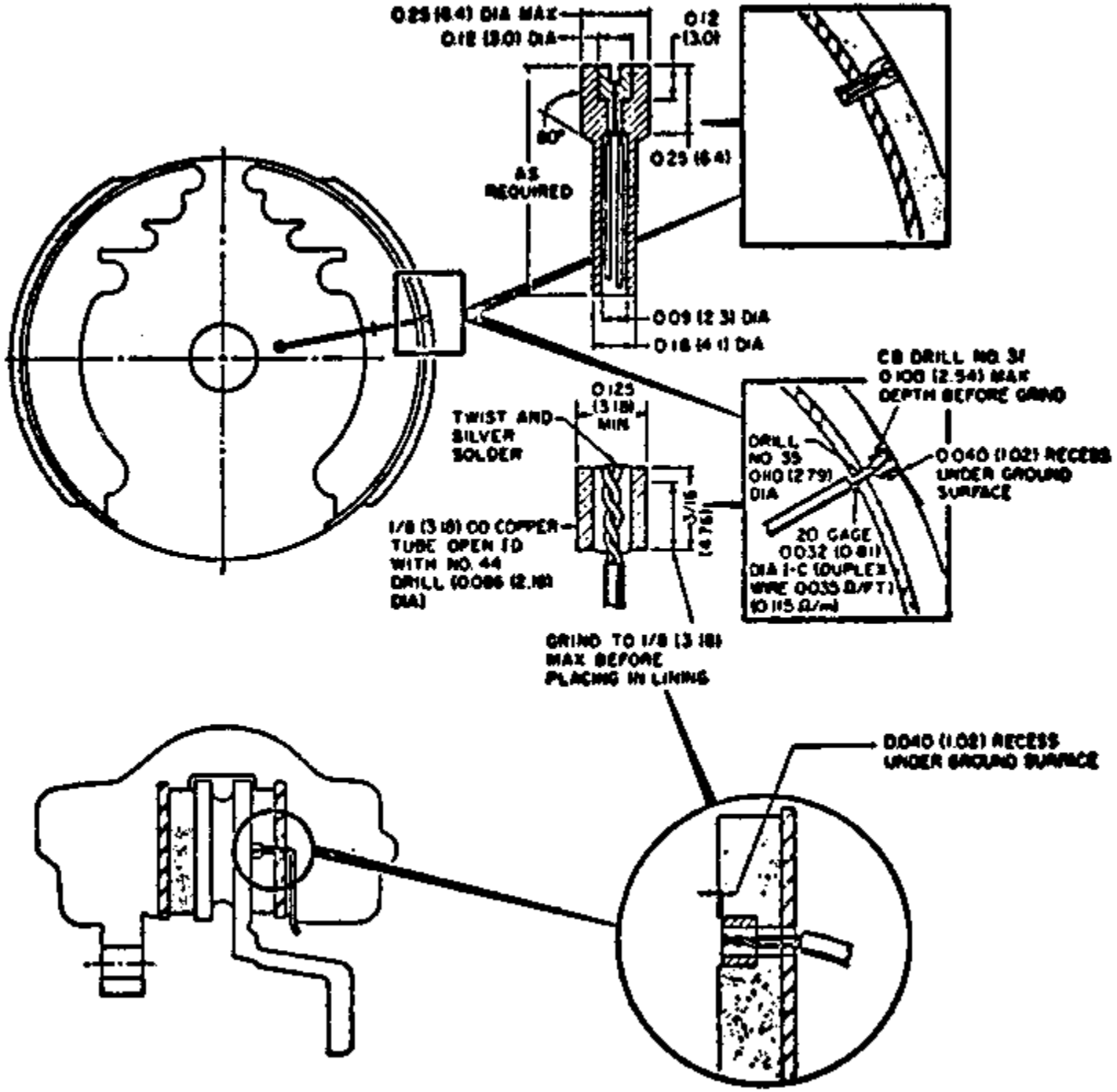
0.25 (6.4) DIA MAX
0.18 (3.0) DIA
0.12 (3.0)
60°
AS REQUIRED
0.25 (6.4)
0.09 (2.3) DIA
0.16 (4.1) DIA
CB DRILL NO. 31
0.100 (2.54) MAX DEPTH BEFORE GRIND
0.125 (3.18) MIN
TWIST AND SILVER SOLDER
DRILL NO. 35 0.110 (2.79) DIA
0.040 (1.02) RECESS UNDER GROUND SURFACE
1/8 (3.18) OD COPPER TUBE OPEN ID WITH NO. 44 DRILL (0.086 (2.18) DIA)
3/16 (4.76)
20 GAGE 0.032 (0.81) DIA I-C (DUPLEX WIRE 0.035 Ω/FT) (0.115 Ω/m)
GRIND TO 1/8 (3.18) MAX BEFORE PLACING IN LINING
0.040 (1.02) RECESS UNDER GROUND SURFACE