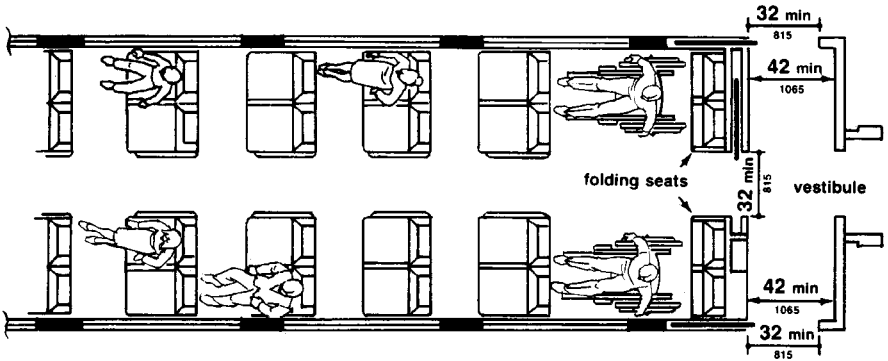


Fig. 3
Commuter Rail Car (without restrooms)

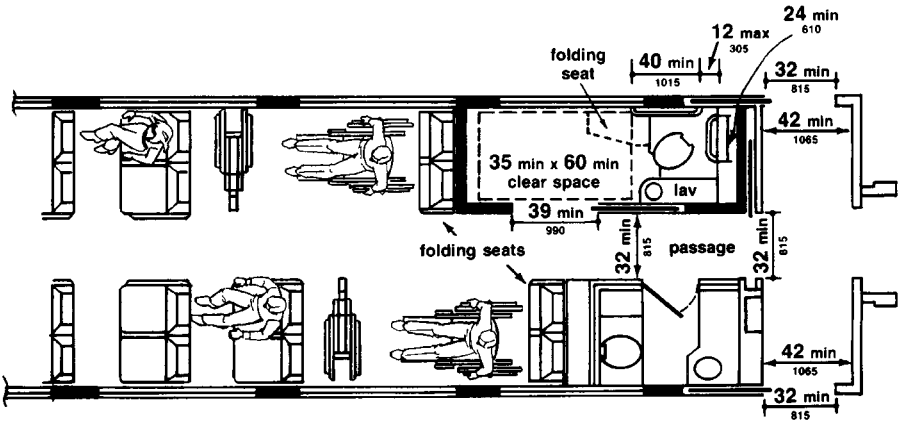


Fig. 4
Intercity Rail Car (with accessible restroom)