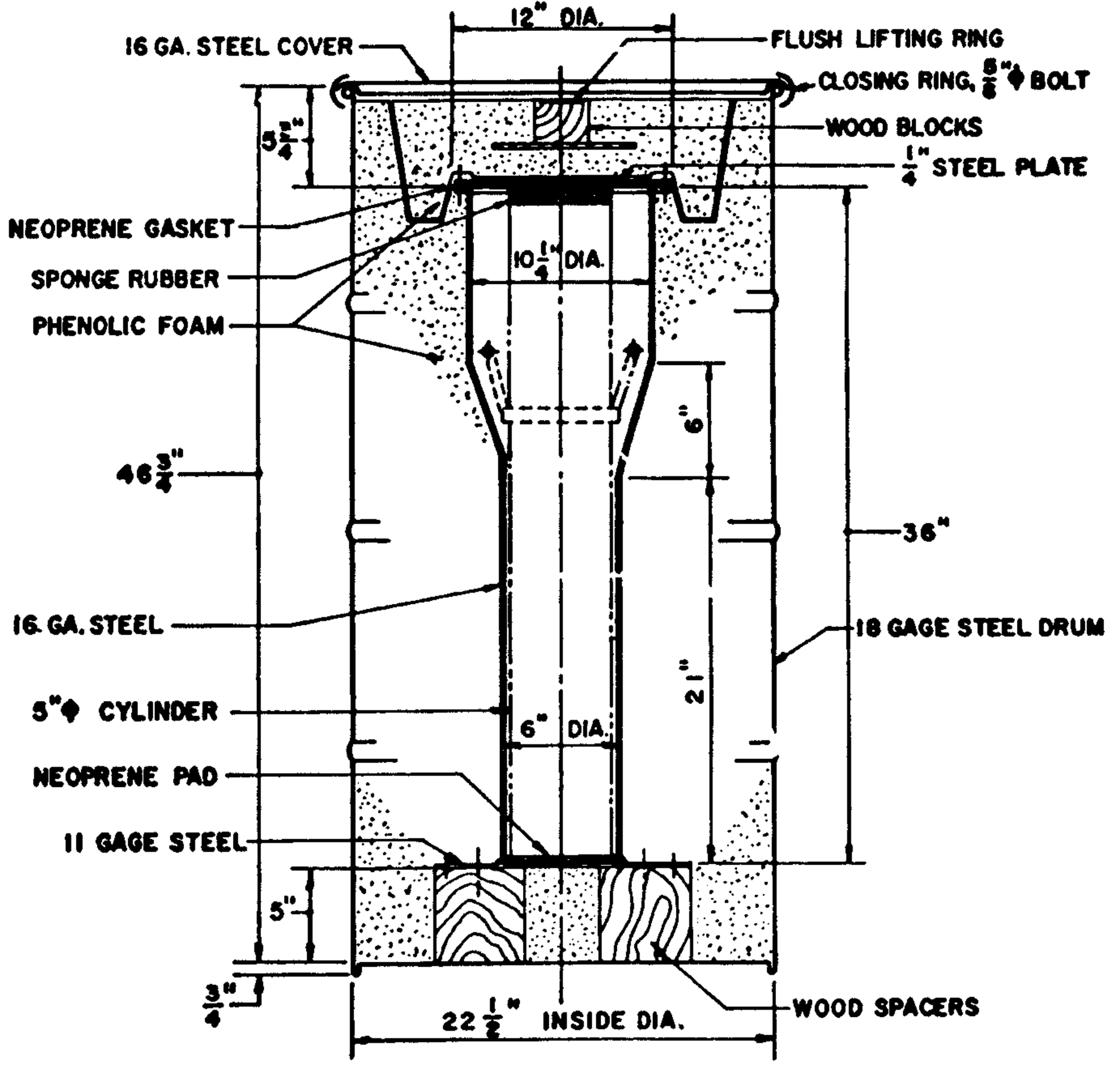
12" DIA.
16 GA. STEEL COVER
FLUSH LIFTING RING
CLOSING RING, 5/8" ϕ BOLT
WOOD BLOCKS
1/4" STEEL PLATE
5 3/4"
NEOPRENE GASKET
SPONGE RUBBER
PHENOLIC FOAM
10 1/4" DIA.
6"
46 3/4"
36"
16 GA. STEEL
18 GAGE STEEL DRUM
21"
5" ϕ CYLINDER
6" DIA.
NEOPRENE PAD
11 GAGE STEEL
5"
3/4"
22 1/2" INSIDE DIA.
WOOD SPACERS