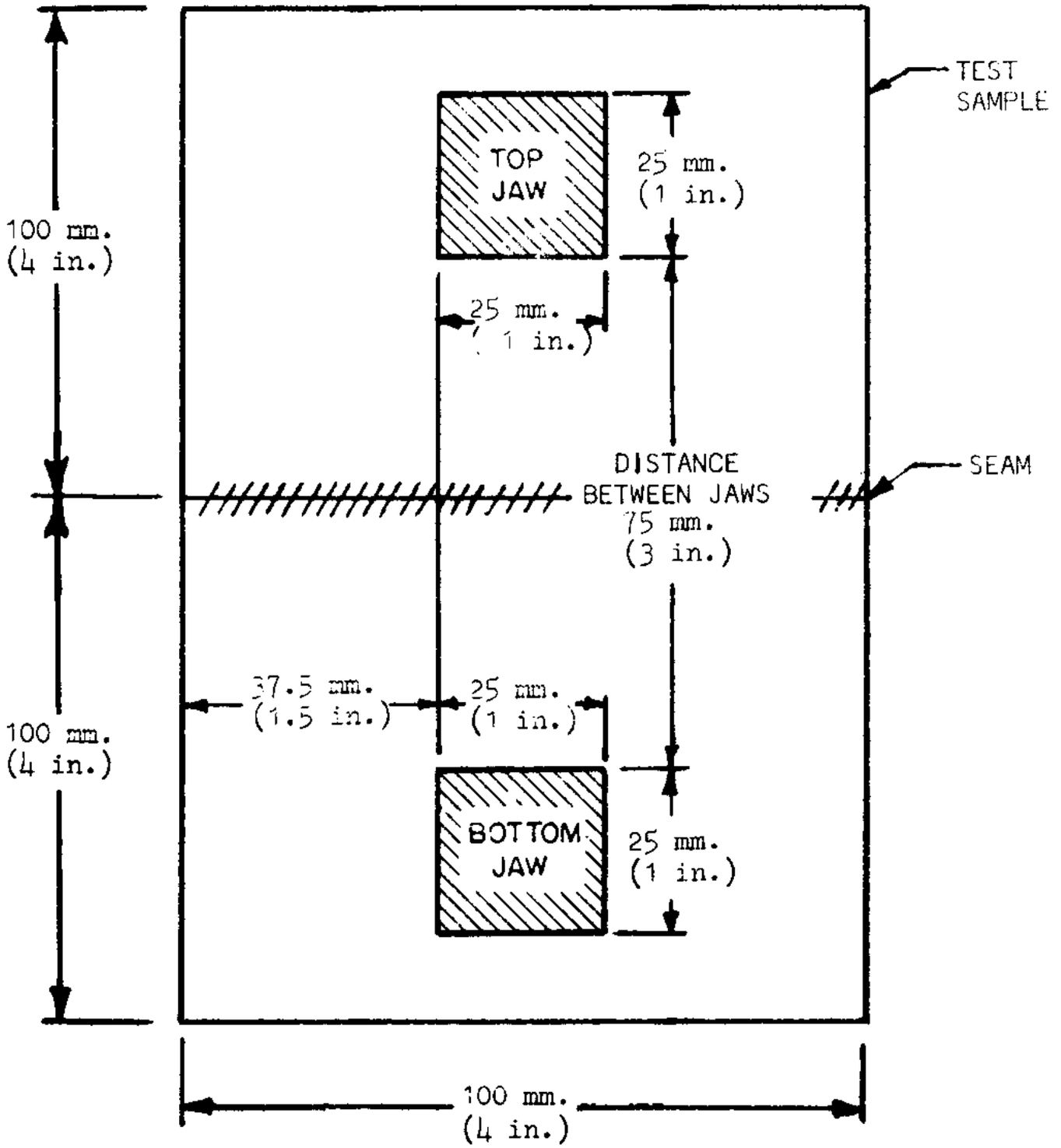

Figure 160.071-17(m)(3).

Method of mountimg sample for seam strength test.