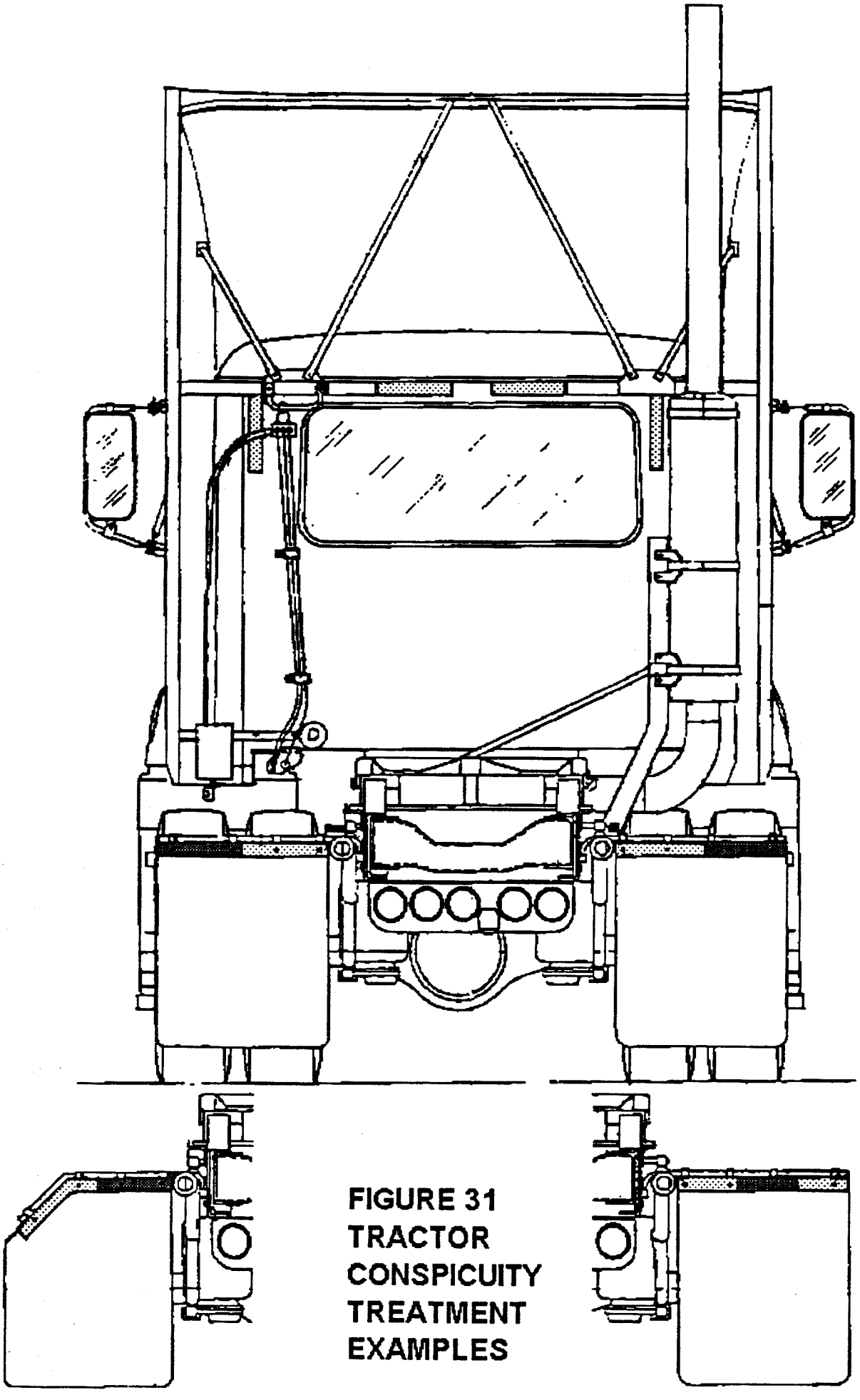

FIGURE 31
TRACTOR
CONSPICUITY
TREATMENT
EXAMPLES