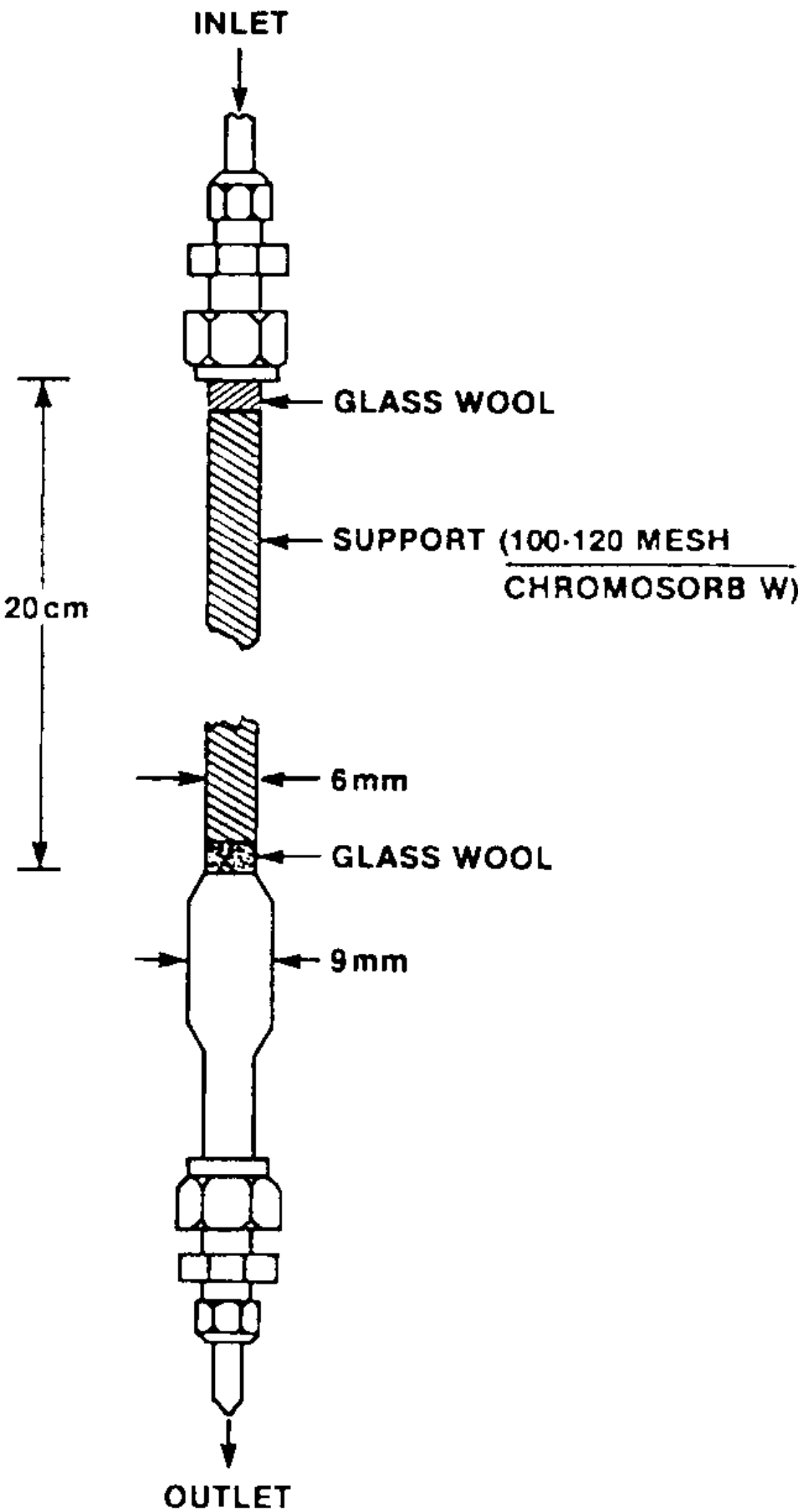Figure 1—Generator Column