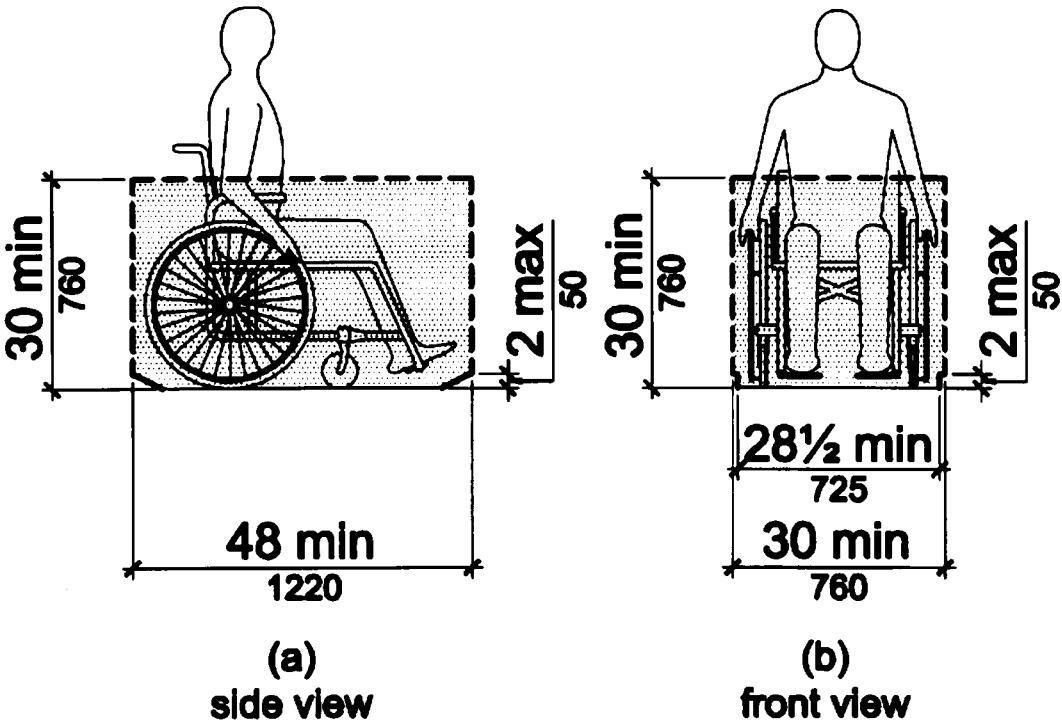

Figure 1
Wheelchair or Mobility Aid Envelope

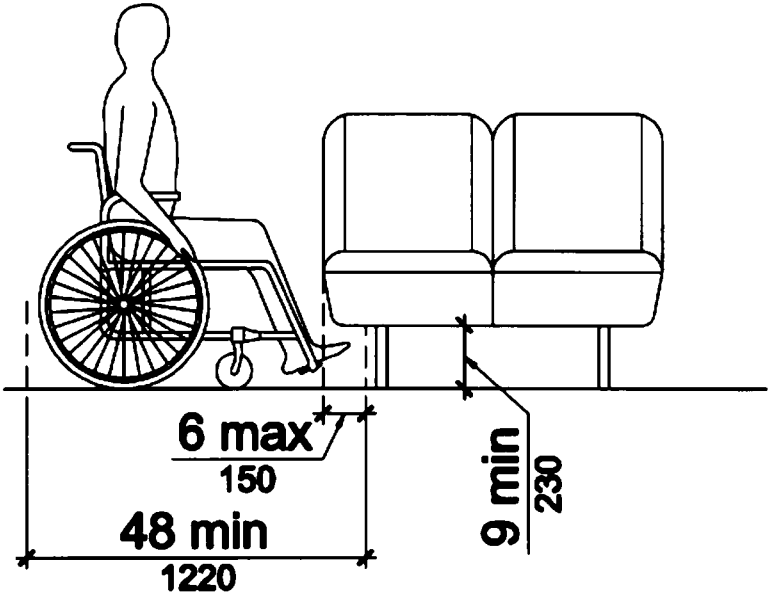

Figure 2
Toe Clearance Under a Fixed Element