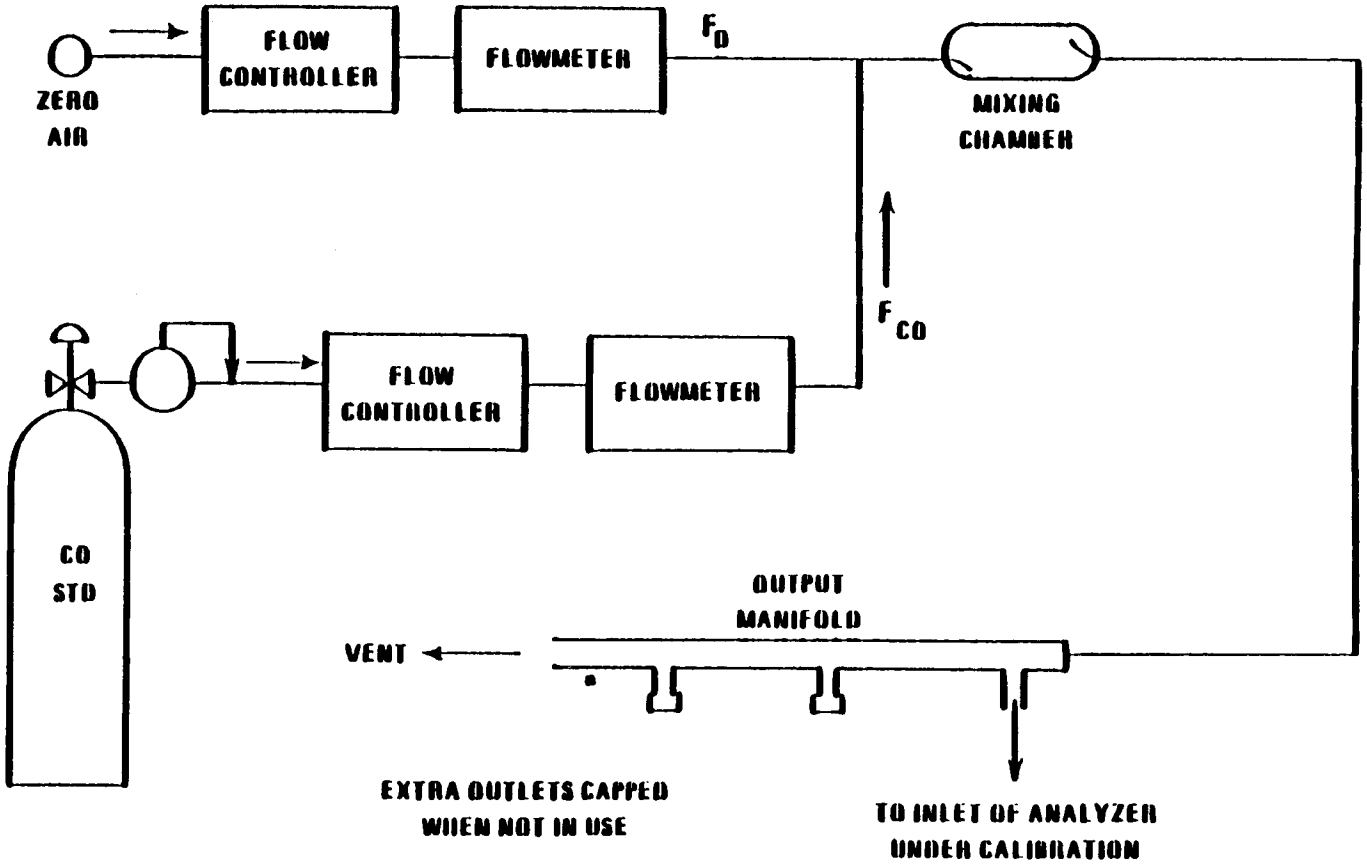

Figure 1. Dilution method for calibration of CO analyzers.