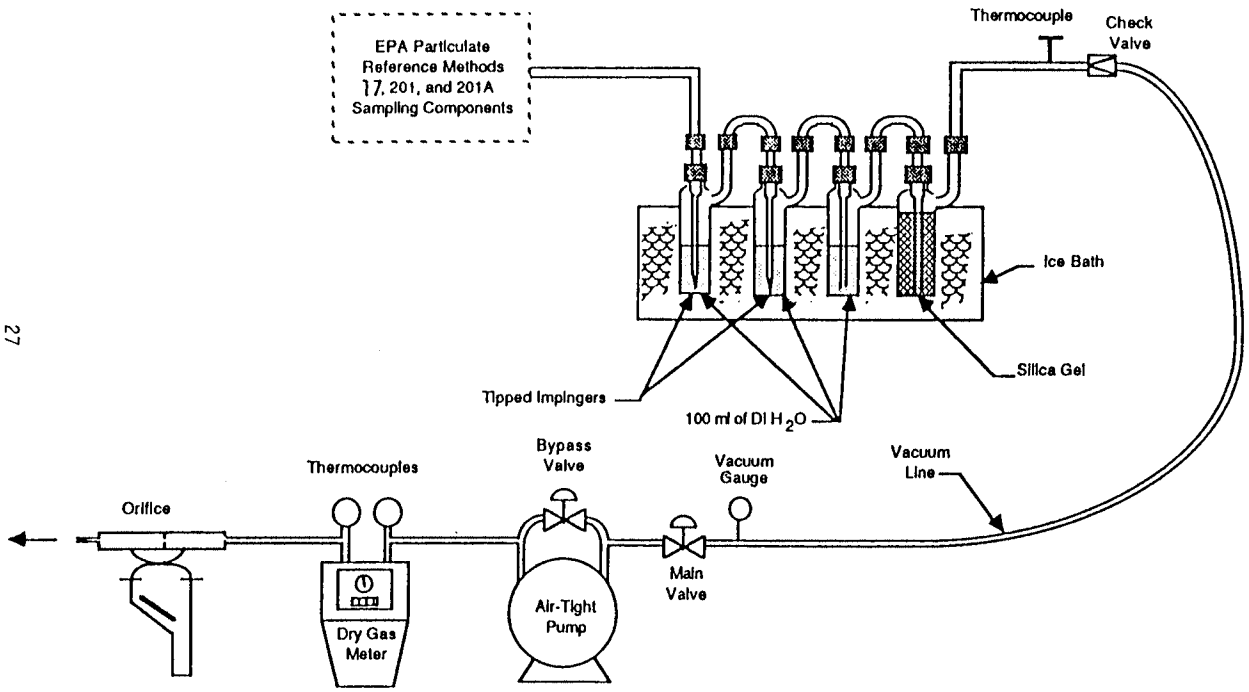

Figure 202-1. Schematic of condensible particulate sampling train.